E-Type Retaining Rings/JIS/Spring Steel

JIS B 2804

TAIYO Stainless Spring Co., Ltd.

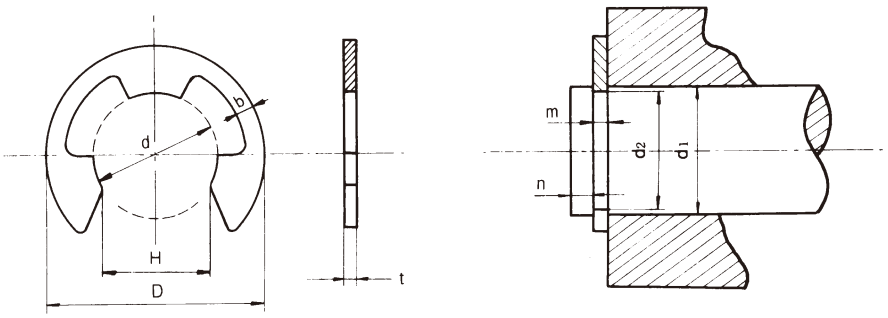

Unit: mm

	Dimensions Codes	Nominals	Applicable Shafts d_1	Dimensions of Retaining Rings										Groove Dimensions (Ref.)				
				Internal Diameter d		External Diameter D		H		Thickness t		b Approx.		Groove Diameter D		Groove Width m		n Min.
	11008	0.8	1～1.4	0.8	0 −0.08	2	±0.1	0.7	0 −0.25	0.2	±0.02	0.3	0.8	+0.05 0	0.3	+0.05 0		0.4
※	11012	1.2	1.4～2	1.2	0 −0.09	3		1		0.3	±0.025	0.4	1.2	+0.06 0	0.4			0.6
※	11015	1.5	2～2.5	1.5		4	±0.2	1.3		0.4	±0.03	0.6	1.5		0.5			0.8
※	11020	2	2.5～3.2	2		5		1.7		0.4		0.7	2		0.5			1
※	11025	2.5	3.2～4	2.5		6		2.1		0.4		0.8	2.5		0.5			1
※	11030	3	4～5	3		7		2.6		0.6	±0.04	0.9	3		0.7	+0.1 0		1
※	11040	4	5～7	4	0 −0.12	9		3.5	0 −0.3	0.6		1.1	4	+0.075 0	0.7			1.2
※	11050	5	6～8	5		11		4.3		0.6		1.2	5		0.7			1.2
※	11060	6	7～9	6		12		5.2		0.8		1.4	6		0.9			1.2
※	11070	7	8～11	7	0 −0.15	14		6.1	0 −0.35	0.8		1.6	7	+0.09 0	0.9			1.5
※	11080	8	9～12	8		16		6.9		0.8		1.8	8		0.9			1.8
※	11090	9	10～14	9		18		7.8		0.8		2.0	9		0.9			2
※	11100	10	11～15	10		20	±0.3	8.7		1	±0.05	2.2	10		1.15	+0.14 0		2
	11120	12	13～18	12	0 −0.18	23		10.4	0 −0.45	1		2.4	12	+0.11 0	1.15			2.5
	11150	15	16～24	15		29		13		1.5	±0.06	2.8	15		1.65			3
	11190	19	20～31	19	0 −0.21	37		16.5		1.5		4.0	19	+0.13 0	1.65			3.5
	11240	24	25～38	24		44		20.8	0 −0.5	2	±0.07	5.0	24		2.2			4

Notes: Items marked with ※ are also available as stacked package versions (change product code to 245 and first two digits of dimensions code to 45).

Product code	211	**Material code**	70…Spring Steel	
Surface code	03…Temper Color 05…Phosphate Coating 30…Ep-Fe/Zn 5/trivalent CM 2 (trivalent chromate)	**Hardness**	HRC 44 – 53	

Part Number Structure (Standardized Product Code)

Product — Surface

② ① ① ⑦ ⓪ ○ ○ — ○ ○ ○ ○ ○

Material — Dimensions code