TAIYO Stainless Spring Co., Ltd.

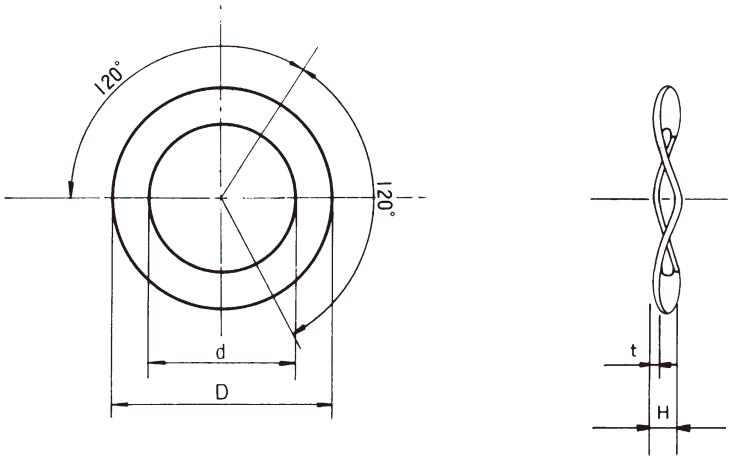

Unit: mm

Dimensions Codes	Nominals	Internal Diameter (d)		External Diameter (D)		Thickness (t)		Free Height (H)	
		Basic Size	Tolerance	Basic Size	Tolerance	Basic Size	Tolerance	Basic Size	Tolerance
41004	4	4.3	+0.20 0	8	0 −0.35	0.15	±0.020	0.6	+0.4 0
41005	5	5.4		10		0.15		0.8	
41905	5L	5.4		12	0 −0.40	0.15		1	
41006	6	6.4	+0.25 0	11		0.15		1	
41906	6L	6.4		14		0.15		1.3	
41007	7	7.5		12		0.2		1	
41008	8	8.5		13		0.2		1.2	
41908	8L	8.5		17		0.2		1.6	
41010	10	10.6	+0.30 0	15		0.25	±0.025	1.4	
	10L	10.6		21	0 −0.50	0.25		2	+0.5 0
41012	12	13		17	0 −0.40	0.25		1.8	
	12L	13		24	0 −0.50	0.25		2.6	
41014	14	15		20		0.3		2	
	14L	15		26		0.3		2.6	
41016	16	17		23		0.3		2.5	
	16L	17		30		0.3		3.3	
41018	18	19		25		0.4	±0.030	2.5	
	18L	19		34	0 −0.60	0.4		3.4	+0.6 0
41020	20	21.5	+0.35 0	28	0 −0.50	0.4		3.1	
	20L	21.5		38	0 −0.60	0.4		4.2	

Remarks: 1. According to JASO F 302 Automotive Standard Waved Spring Washers: Wave Washers for Adjustment, Type 3.
2. Internal and External dimensions represent before molding.
3. Please refer to page T5 for technical information.

Product code	141	Material code	02…SUS304-CSP 70…Spring Steel	Part Number Structure (Standardized Product Code)
Surface code	01…Burnished (SUS304-CSP) 03…Temper Color (Spring Steel)	Hardness	HRC37 – 46 (SUS304-CSP) HRC42 – 50 (Spring Steel)	Product: ①④① Surface: ○○ — Material: ○○ Dimensions code: ○○○○○